REDSOLAR

Balcony Solar System

PERC Technology

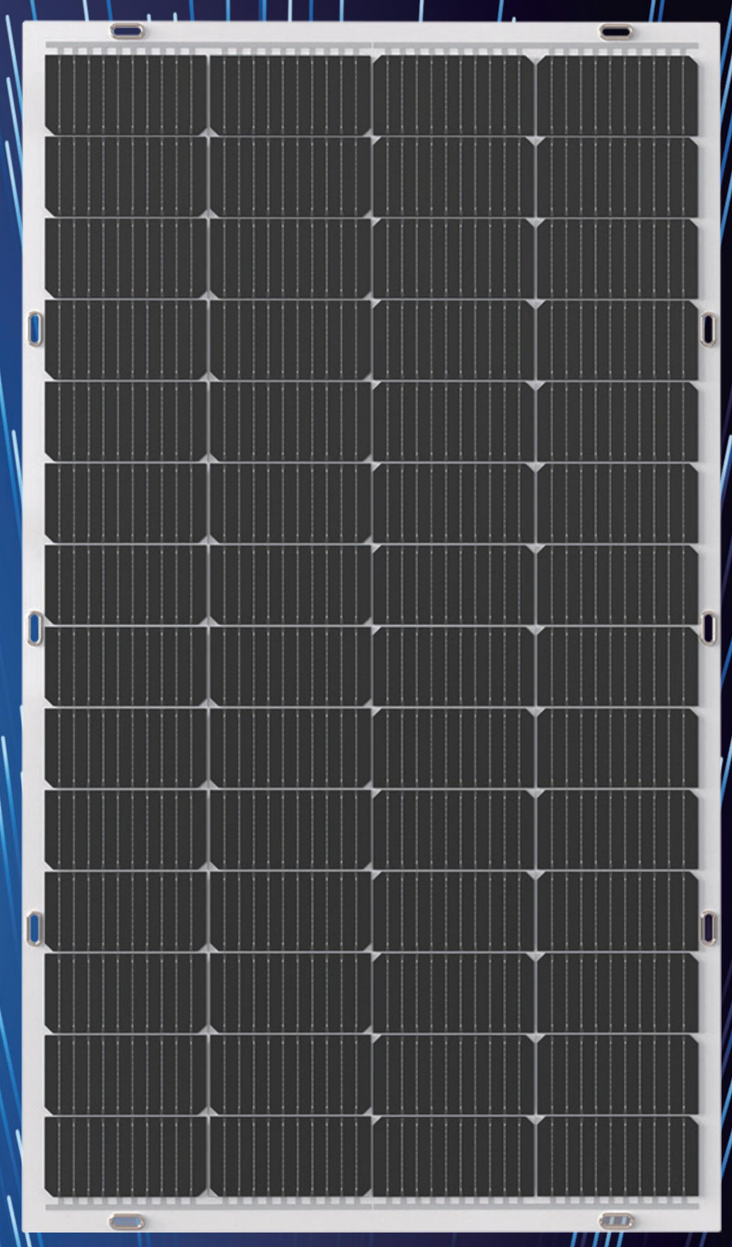

200W /Output power

18.3% /Maximum efficiency

0~+5W /Power tolerance

DIY **Fast Installation**

Light Weight

Multiple Using Scenarios

STEP 1

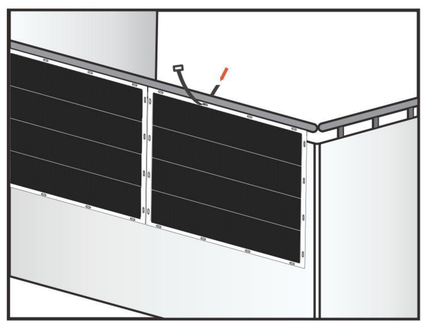

Fix the solar panel with strap to the balcony

STEP 2

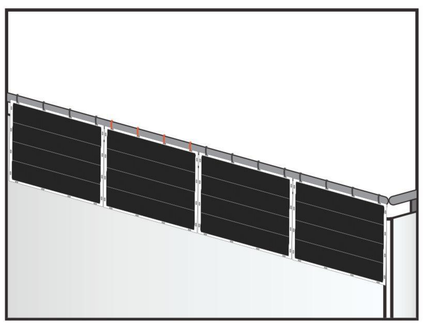

Follow the first step and fix all the solar panels

STEP 3

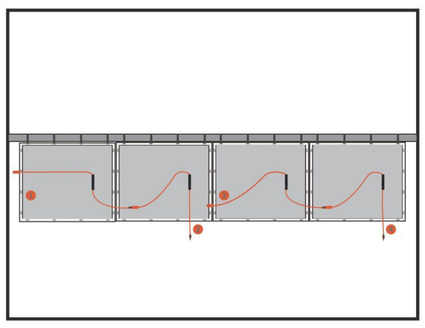

Connect micro-inverter

STEP 4

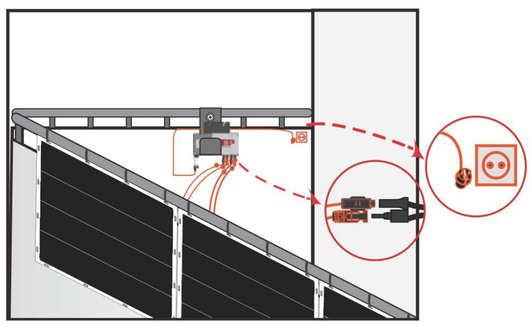

Connect extension cable and plug in power supply

Note: Please consult the technical engineers for detailed installation steps. The above pictures are only for reference.

CE Quality system:ISO 9001: 2005

Hunan Red Solar New Energy Science and Technology Co.,Ltd

www.red-solar.com

sales@red-solar.com

REDSOLAR

Balcony Solar Svstem

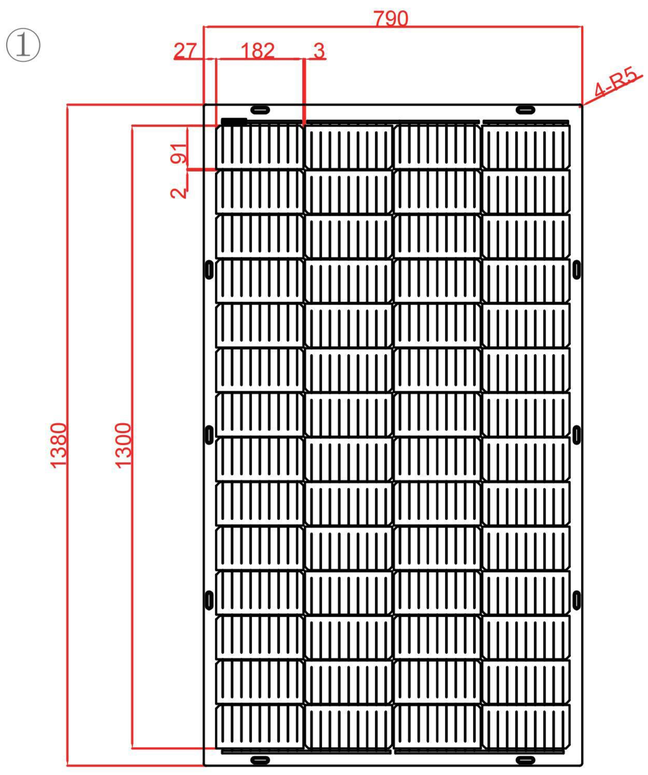

CETC-200M(LB)/56

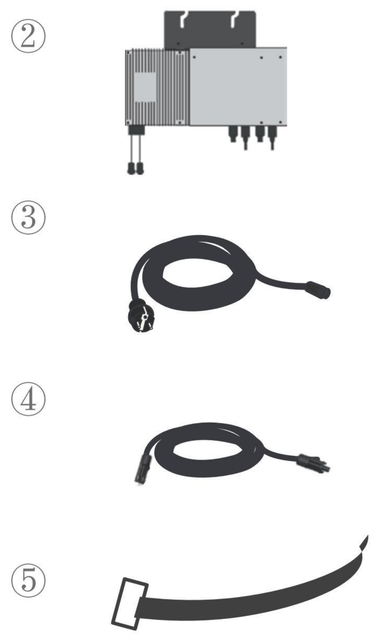

Component

① Flexible Solar Panel*4

② Micro-inverter*1

③ AC Cable*1

④ PV Cable 4m*4

⑤ Fixing strap*64

Panel Packaging(2 pieces/set)		
Container	20'GP	40'HQ
Sets per pallet	42	49
Sets per container	336	882

PV inverter(1 box/set)		
Container	20'GP	40'HQ
Boxs per pallet	120	120
Boxs per container	1920	4320

Note: Container transport packaging method

Solar panel

ELECTRICAL CHARACTERISTICS	
Module Type	CETC-200M(LB)/56
Rated Maximum Power(Pmax)	200W
Power Sorting	(0,+4.99)
Current at Pmax(Imp)	13.0A
Votage at Pmax(Vmp)	15.4V
Short-circuit Current(Isc)	13.6A
Open-circuit Voltage(Voc)	19.4V
Power Production Tolerance	±3%
Short-circuit Current Tolerance	±5%
Open-circuit Voltage Tolerance	±5%

All technicaldata measured at STC:1000W/m²AM 1.5,25°C

MECHANICAL CHARACTERISTICS

Weight	3.4kg/㎡
Dimension	1380*790*5mm
Maximum System Voltage	600/1000/1500V
Maximum series Fuse Rating	15/25A
Cell Technology	Mono-Si
Fire Rating	Class C

Micro-inverter BDM-600

Output | AC

Max AC Output Power(Wp)	600		
Nominal Power Grid Voltage (Vac)	240	208	230
Allowable Power Grid Voltage (Vac)	211-264	183-229	Configurable
Allowable Power Grid Frequency (Hz)	59.3-60.5		Configurable
THD	<3% at rated power		
Power Factor (cos phi, fixed)	>0.99 at rated power		
Rated Output Current (Aac)	2.50	2.88	2.61
Current (inrush, peak and duration)	24A,15us		
Nominal Frequency (Hz)	60	60	50
Maximum Output Fault Current (Aac)	4.6A peak		
Maximum Output Overcurrent Protection (Aac)	10		
Maximum Number of Units per Branch (20A) All NEC adjustment factors have been considered	7	6	6

Input | DC

Max Recommended PV Power (Wp)	450*2
Max DC Open Circuit Voltage (Vdc)	60 (80V Customized)
Max DC Input Current (Adc)	14*2
MPPT Tracking Accuracy	>99.5%
MPPT Tracking Range (Vdc)	22-55
Isc PV (absolute maximum) (Adc)	18*2
Maximum Inverter Backfeed Current to the Array (Adc)	0

System Efficiency

Weighted Averaged Efficiency (CEC)	96.50%
Night Time Rate Loss (Wp)	0.11

All data contained in this specification are subject to change without prior notice. The final interpretation rights belong to Hunan Red Solar New Energy Science and Technology Co.,Ltd (202310V01)